STREBEL
HEIZUNG · WARMWASSER

Pellet Boiler Varan 1.14., 1.20

Manual For Installation And Useage
Product Information

ErP
A++
SPECIFICATION
A++ to G
RATING

Safety Instructions

This User Manual

Every person who is intending to operate this boiler is obligated to read this manual carefully,
especially the safety instructions. This includes individuals which are cleaning or maintaining the boiler.
Otherwise, the legal warranty expires.
Please keep and preserve this manual.

Usage Of This Boiler

The manufacturer is not responsible for damages resulting from improper installation, maintainence or operation. In this case, the user is liable and **the legal warranty expires.**

Respect local provisions and legal guidelines when setting up, installing, operating and disposing the boiler. The boiler must be installed by expert personnel. Do not make unauthorized modifications on the boiler or its water and exhaust connections.

To transport the boiler, make sure that the transport aids and the underground that the boiler has to traverse over are able to sustain its weight. The underground on which the boiler is stored or installed on should also have the suitable load capacity.

So not expose the boiler to weather conditions. The installation and storage is only authorized indoors (VDE 0100 part 200). Do not cover the boiler or lean/place objects directly beside it. The installation in wet spaces/humidors is not permitted. The boiler is not protected against spray water.

The person responsible for installation and/or implementation must inform the user about the correct operation and cleaning of the boiler. Only use the boiler if it is installed correctly. Always adhere to this user manual. Malfunctions are to be repaired as soon as possible.

This boiler may only be used for the purposes it is intended and was manufactured according to current safety requirements. Incorrect use may cause damage to the boiler or to other objects in in close proximity. Accidents, injury or even death of the usermay occur if the safety instructions are violated.
The operation of this appliance by children or individuals with restricted perception or motoric abilities, each without accompaniment, is prohibited. Pay attention that children or pets do not comke in direct contact with the boiler or climb it.

It is prohibited to place heavy objects on the boiler or stepping onto it.

Operation

When staring the boiler for the first time, it is possible that a noticeable odour development caused by heat-resitant coatings or painting of single boiler parts may occur. During operation, these coatings will cure and the odour will fade out.

Note that certain surfaces of the boiler will heat up during operation. If you come in contact with parts of the boiler, make sure that they have cooled down properly or use suitable protective gloves. Make sure that pieces of clothing and other heat-sensitive materials do not come in contact with the boiler.

Because of the changes in temperature during heating up and cooling down, boiler parts may give out expansium noises (mostly knocking or crackling). The ocurrence of such sounds is no manufacturing or operation defect.

If you open the combustion chamber door during operation or when the boiler is still warm, particles of ember or ash may fall to the floor. Remove them with heat-restistant tools and protective gloves. .

The installation of a hydraulic group is mandatory with boilers of this type series.

Operation Parameters

The user may only modify the operation parameters in the range that is prescribed by this manual. The use of other settings than those listed in this manual can cause malfunctions in the system.

The operating pressure must never exceed 2,5 bar. A boiler temperatur of above 90˚C is not allowed.

Because of possible risk of frost inside the aquiferous heating pipes, it is recommended to not switch-off the boiler at outdoor temperatures below 0°C if the boiler is the only heating element in the system.

Spare Parts

To replace defective parts of the boiler, only use original STREBEL spare parts.

Prescibed Fuel

The boiler is construdef only for the combustion of wood pellets. Using any other fuel is prohibited. In any case, do not use pieces of wood, paper, oil, plastic or other materials as fuel.

More information in chapter 3.

Possible Risks

If the combustion chamber door or cleaning openings are left open during operation, carbon monoxide is able to discharge from the boiler. Do not leave them open longer than necessary. Insufficient air supply during operation is lethal. It is prohibited to close the openings of the boiler or the installation room that provide the fresh air needed for operation.

This boiler has electric components which are live during operation, as well as movable parts on the inside. Under any circumstances do not stick a finger or other objects in the openings of the boiler. There is a danger of electric shocks or burn injury, as well as property damage.

In case water is leaking from the boiler, stop its operation immediately and have competent service personnel at the damage.

Minimum Distance Of Flammable Materials

Keep flammable materials and objects away from the boiler and make sure that the insulation material below the boiler protects the floor from harmful heat exposure. The minimum distance flammable objects have to be kept abway from the boiler is stringently prescribed and is subject to regional directives. Ask your chimney sweep for detail information.

In case the boiler is not installed in a seperate boiler room but in the living space with an open flue, combustion air is taken from the living space as well.

The minimum distance from the boiler and its exhaust pipe to-materials with low or intermediate flammability is 100 mm. The minimum distance from easily flammable objects is 200 mm. The latter also counts for materials if their flammability is unknown.

Fresh Air Intake

Boilers need a suitable air supply to maintain combustion.

Open Flue: Under certain circumstances, if the fresh air is taken directly from the boiler room, an insufficient supply of oyxgen needed for combustion may occur. This is especially prominent in houses or flats with tightly sealed doors and windows. Operating the boiler without constant supply of outside air can cause sevee problems in operation. It is recommended to install an automatic venting system in the builduing or use a balanced flue system.

Balanced Flue: The fresh air opening is connected with a sealed pipe which takes air from the outside or a seperate room with constant fresh air supply. Keep the air supply pipe as short as possible. It is recommended to install the pipe with the capability to be shut off (according to EnEV) to prevent humidity from entering during longer operation pauses.
Avoid using combustion air from the flue. Because of the flue draught, there is always negative pressure.

The simultaneous operation of artificial ventilation (e.g. cooking hood) and the pellet boiler in the same room is prohibited. The air suction may cause problems in boiler operation and discharge of carbon monoxide.

Talk to your chimney sweep about regional prescriptions regarding air supply.

1 Boiler Features

1.1 General Information

The **STREBEL** ***Varan 2.20*** is a pellet boiler for aquiferous central heating systems with radiators and/or underfloor heating. It is designed to be set up directly in the living space (without an external boiler room neded). During operation, heat is transmitted directly into the room vis the boiler surface as well as into the heating system.

Components
The integrated pellet tank is filled by hand and holds 45 kg or 75 litres of wood pellets. The pellet discharge takes place via auger, a silent, energy-saving reduction gear and a downpipe.

An expansion vessel (10 litres), an electronically controlled **Wilo** HE circulator pump and a safety group are already installed in the compact boiler construction. The controller has a daily, weekly and weekend programme as well as three programmable performance levels.

2 Technical Data

Pellet Boiler		Varan 1.14	Varan 1.20
Rated heat output	kW	11.9	20
Rated output into the heating system	kW	10.45	18.7
Rated output directly from surface	kW	1.45	1.3
Distance from floor to centre of exhaust connection	mm	180	134
Exhaust connection	mm	80	80
Flue draught	Pa	11	11
Efficiency	%	>91	>91
Pellet tank volume	kg/Litres	45/75	45/75
Weight	kg	192	235
Water volume	Litres	24	38
Operating/testing pressure	bar	2.5/5	2.5/5
Boielr temperature min./max.	°C	60/90	60/90
Return temperature min.	°C	55	55
Power supply		230 V /50 Hz	230 V /50 Hz
Connections flow/return	Inch	1"	1"
Flue gas temperature (rated output, min. output)	°C	135/90	135/90
Energy label (Range A++ to G)		A++	A++

Changes in models reserved. Dimensions not binding!

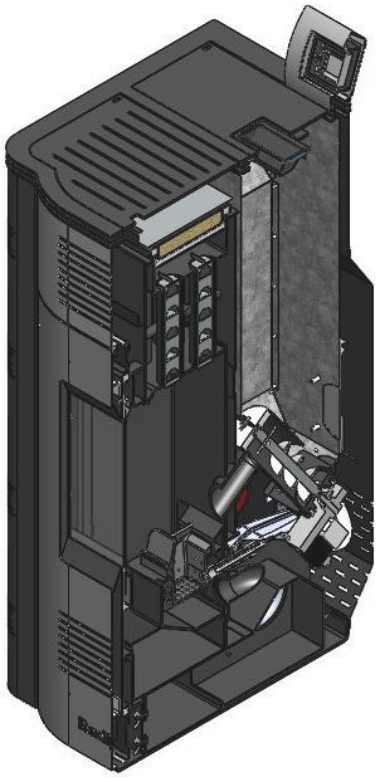

Schematic section Varan 1.14

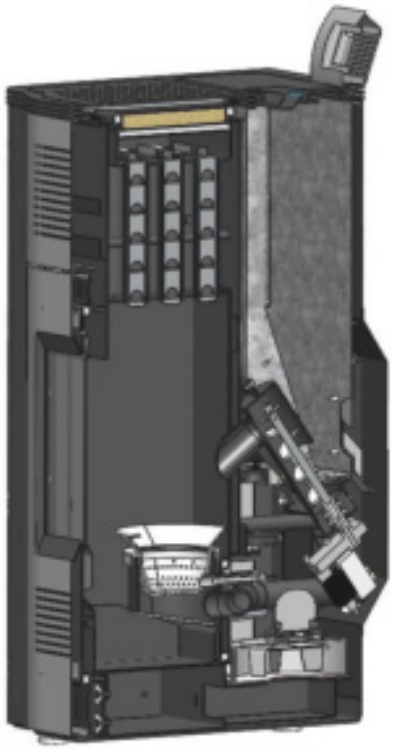

Schematic section Varan 1.20

2.1 Dimensions (in mm)

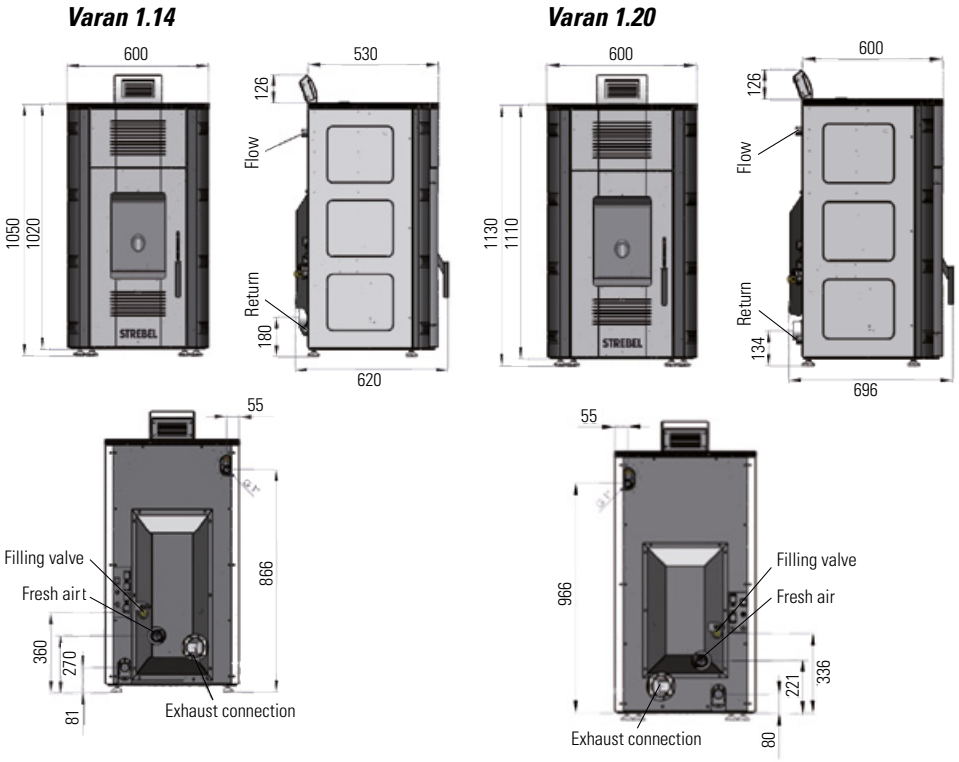

2.2 Recommended Space For Service And Maintenance

When placing the boiler prior to installation, make sure of the following:

- The boiler must be installed as close to the flue and fresh air connections as possible.
- For the operation of the appliance, a power supply of 230 V and 50 Hz is needed. Keep the connection line as short as possible and avoid using extension cords.
- If possible, install the boiler in the largest, most central room of the building.
- The boiler must not be installed in bedrooms or rooms that are inseperatable from the beedroom througha door.
- Do not operate other boilers (for wood or pellets) inside the room where the ***Varan*** boiler is installed to keep up the necessary air supply.
- The installation room must have windows or doos that can be opened for additional fresh air supply or there should be at least an adjacent room connected to the installation room trough a non-flammable pipe that is open at any given time during operation. This adjacent room must have windows or doors that can be opened to provide fresh air.
- In case the boiler is placed on flammable underground (e.g. laminate, parquet, carpet), it must be insulated with a plate consisting of non flammable material (steel, ceramics, ceramic-based insulation etc.). Such plates have to be larger than the floor area of teh boiler itself.

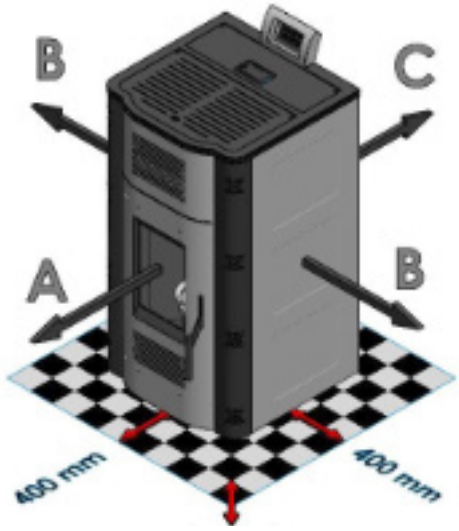

- Keep furniture and other objects at leat 1 metre away from the boiler.
- The distance between the boiler and immobile, solid objects (walls pillars etc) has to be at least 40 cm (measure B), 20 cm from the backside (measure C) and 100 cm from the front (measure A). These distances are necessary to allow cleaning and maintenance of the boiler.

3 Fuel

3.1 Required Fuel Quality

The boiler is construdef only for the combustion of wood pellets. Using any other fuel is prohibited. In any case, do not use pieces of wood, paper, oil, plastic or other materials as fuel.

Wood pellets are zylindrical and made from wood scraps without additives or chemical binders. The pellets must show standard simensions and a low moisture content.

For the best possible combustion use pellets with the quality A1 according to ISO 17225-2:2014, with the seal ENplus-A1 and ÖNORM.

These standards comprise requirements in pellet quality, test regulations, control of production and labelling.

Parameter	Unit	Quality A1
Length	mm	3.15 – 40*
Diameter	mm	6 (+/- 1)**
Chaloric value	MJ/kg	min. 16.5
Mechanical strength	% (Mass)	min. 97.5
Dust (<3,15 mm)	% (Mass)	max. 1
Bulk density	kg/m^3	min. 600
Water content	% (Mass)	max. 10
Ash content	% (Mass)	max. 0.7
Cinder softening temperature	°C	min. 1200
Arsenic content	mg/kg**	max. 1
Led content	mg/kg**	max. 10
Cadmium content	mg/kg**	max. 0.5
Chloine content	% (Mass)**	max. 0.02
Chrome content	mg/kg**	max. 10
Copper content	mg/kg**	max. 10
Nickel content	mg/kg**	max. 10
Mercury content	mg/kg**	max. 0.1
Sulphur content	% (Mass)**	max. 0.03
Nitrogen content	% (Mass)**	max. 0.3
Zinc content	mg/kg**	max. 100

* Max. 1% of the pellets (regarding mass) may exceed a length of 40 mm. More than 45 mm are not permitted.
** in anhydrous condition

4. Construction

4.1 Boiler Main Parts

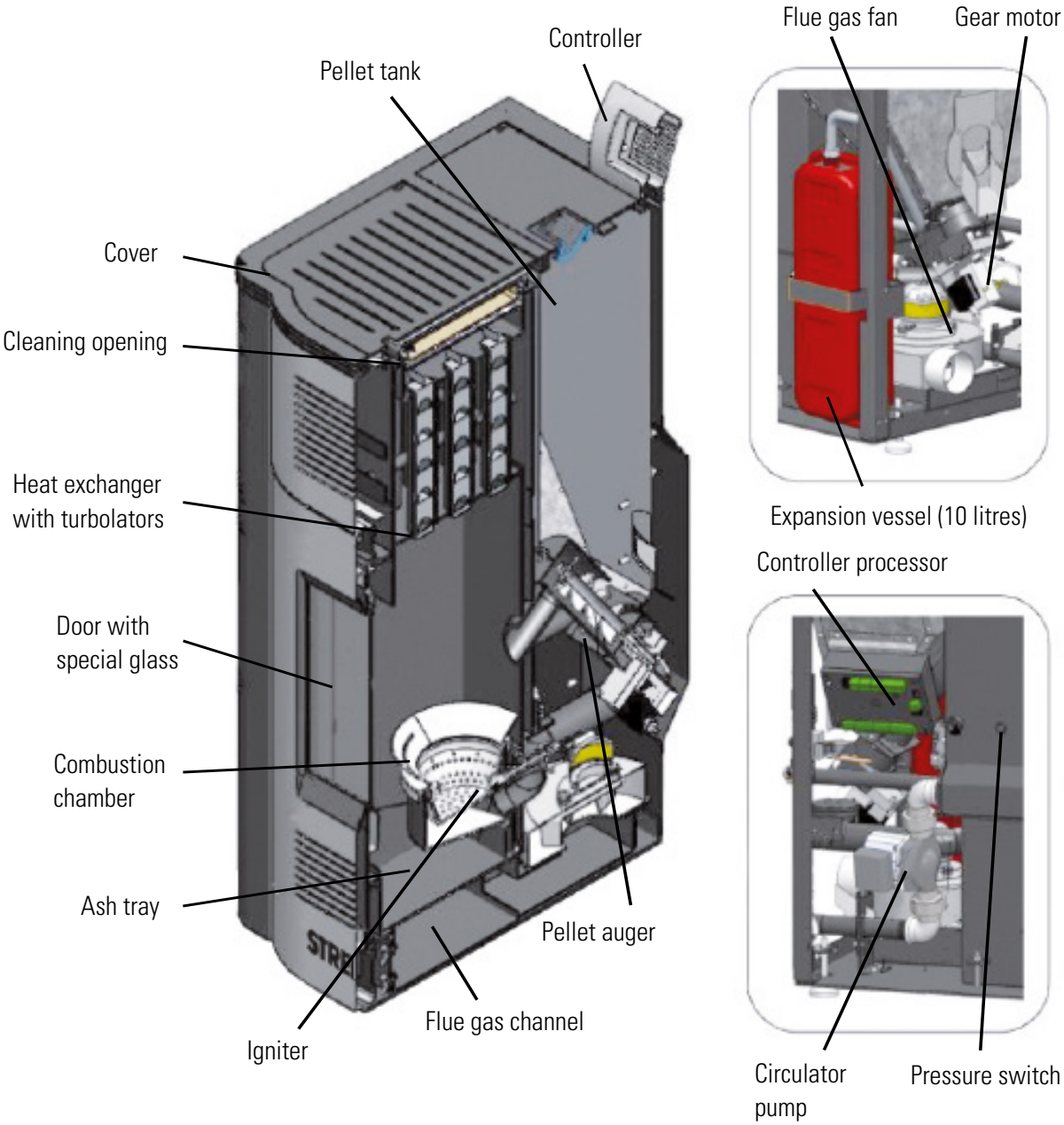

4.2 Electrical Scheme

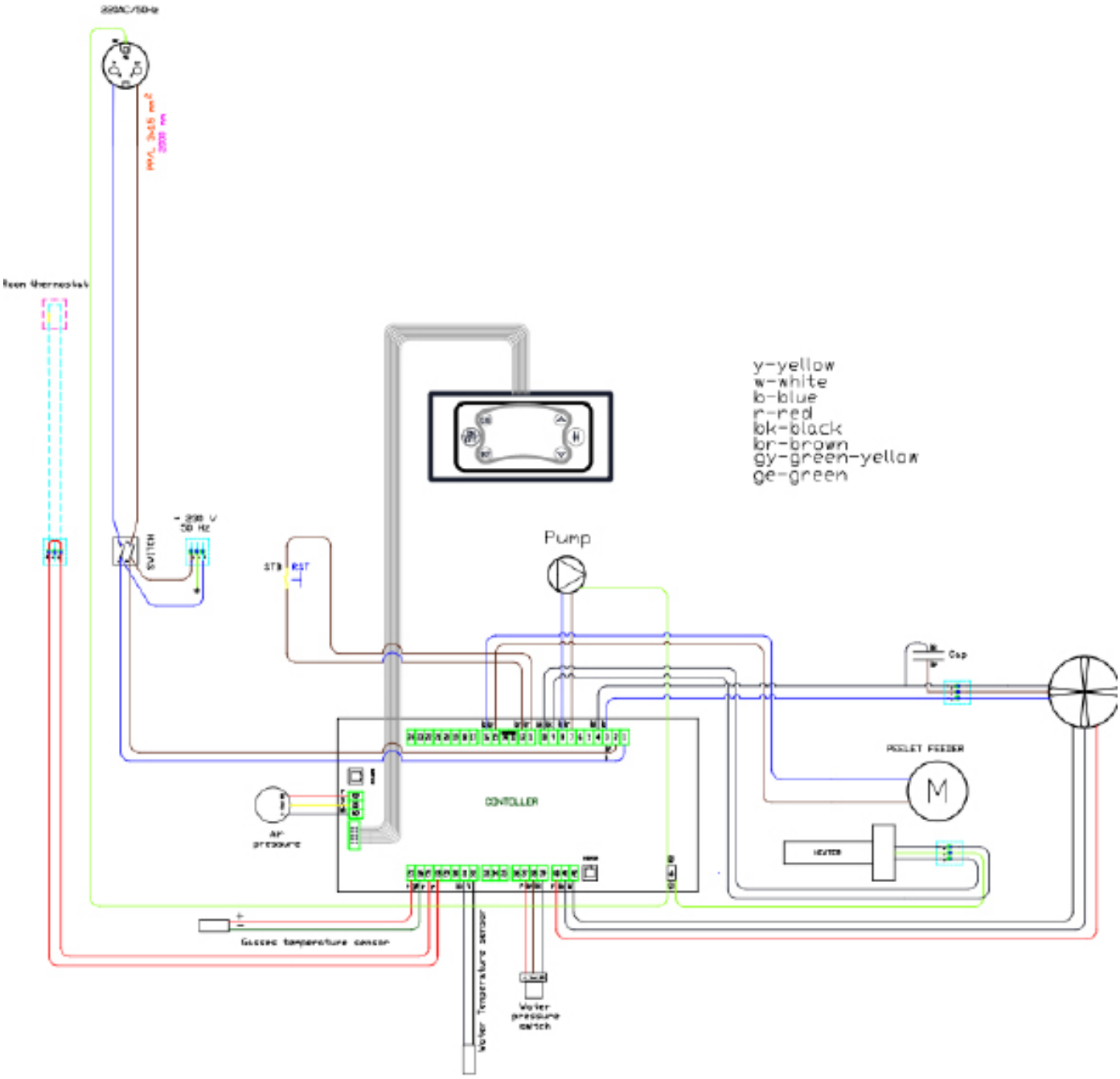

The hatched lines are wires which the qualified personnel must connect to the controller during installation. Connectors of additional appliances have to pass via two connectors on the boiler backside. The connectors are bi-pole or tri-pole. The tri-pole connector is used to connect a room thermostat.

Only use battery powered room thermostats! On the thermostat itself, the connection with an NC (normal closed contact) is used.

4.3 Hydraulic Scheme

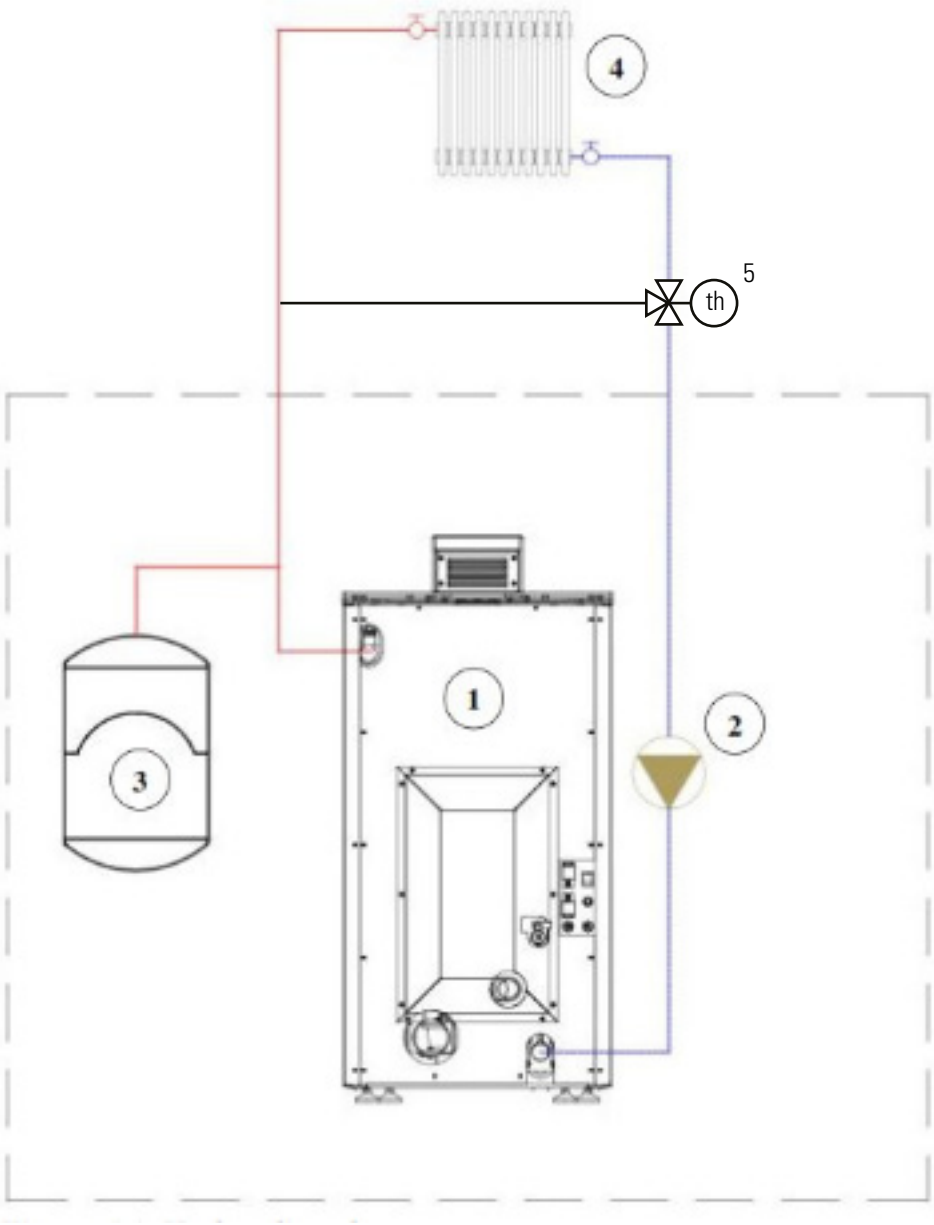

Key:
1. Boiler
2. Circulator pump (integrated in boiler)
3. Expansion vessel 10 litres (integrated in boiler)
4. Radiators, underfloor heating system (via temperature limiter)
5. Thermal valve (min. 55°C)

Always make sure to comply with regional prescriptions when installing a boiler.
STREBEL does not take responsibility for damages caused by a faulty installation of the boiler.

5 Installation

5.1 General Warnings

Mind regional prescriptions and legal guidelines during installation, operation and disposal of the boiler. The boiler must be installed by qualified personnel.

This boiler is designed to run in aquiferous central heating installations with an operating pressure of max. 2.5 bar an max. water temperature of 90°C.
The combustion chamber door must remain closed during normal heating operation.

All electrical components of the boiler need a power supply of 230 V. An improper connection can result in electrical shocks.

Prior to installation, check the boiler for visible damages.

5.2 Safety Devices

Make sure that the following components are always in function:

- safety valve, vent valve,
- electro-mechanic water pressure switch
- vacuum actuator
- boiler thermostat.

Safety valve

vent valve

Water pressure switch

This safety element constantly measures the pressure inside the heat exchanger and transmits the information to the controller. In case the pressure sinks below 0,5 bar or exceeds 2,7 bar, the boiler stops operation. The limit values are programmed into the controller.

Vacuum actuator

This component measures the draught in the exhaust channel and transmits the data to the controller. In case the draught value sinks below or exceeds the parameter, teh boiler stops operation and shows an alert message.

NOTE: The flue draught may change due to cloggings or heavy pollution of the flue or the boiler, or defective boiler sealings. Also, bad weather conditions may influence the flue draught.

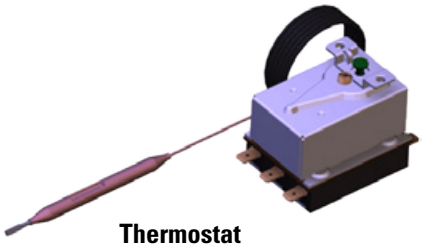

Thermostat

The controller is connected to an independent thermostat which is used to limit the boiler temperature.

This safety thermostat interrupts the operation of the fan. The temperature is limited to 95°C. This safety thermostat is located below the main switch.

For safety reasons, the circulator pump is connected to the controller. In case the water temperature reaches the critical value of 95°C, the fan ceases operation. The pump continues running constantly and derives the excess heat to the radiators, until the temperature is in normal range.

The heating system is to be filled slowly, allowing it to be vented well. During filling of the installation, check if there are leaks in the system.

Note: The safety valve of the current version is located not in front of the boiler like in this picture, but on the boiler backside.

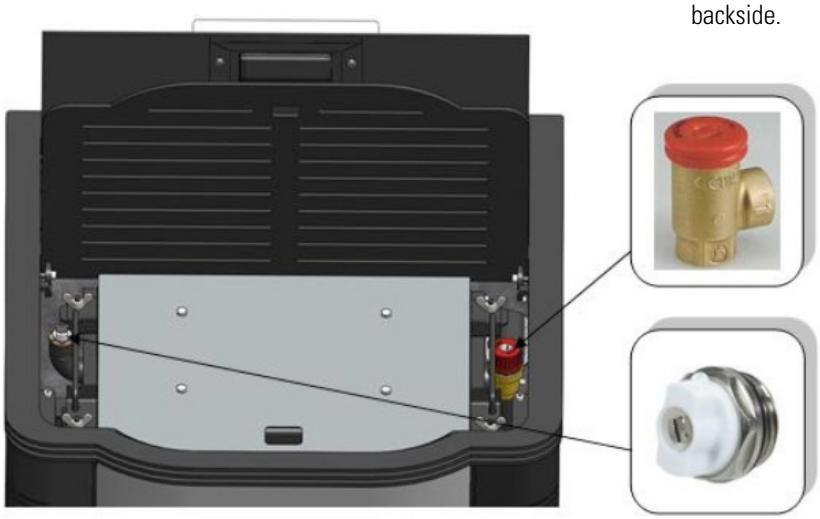

5.3 Flue Connection

When connecting the boiler with the flue, there are two stages of montage:

- Montage of the flue pipes and air supply for combustion.
- Connection to the flue.

Montage of the flue pipes and air supply for combustion:

- The **STREBEL *Varan*** has an exhaust and an air supply connection on its back side.
- Only use certified, stainless pipes for the flue connection. The exhaust connection has a diameter of 80 mm. It is prohibited to reduce the diameter in the following flue pipes.
- The flue gas pipe must not be used for multiple applianes at once.
- Only use a maximum of two 90° angle pipe pieces. The maximum length of a horizontal pipe distance is 2 metres.
- In case the pipes are near flammable materials or lead through them, the pipes must be insulated.
- The pipes and connection elements usually show o-rings made from silicone. If they do not have this kind of seal, use fireproof sealing agent.
- The flue pipe must be detachable when necessary or have an revision opening installed.
- In case the flue pipe does nor lead directly into the flue, but vertically upwards, the installation of a condensate collector is prescribed.
- The air supply from outside of the building for combustion must be guaranteed. Use a pipe consisting of black or Inox steel. The minimum diameter for this pipe is 50 mm.
- If it is not possible to take fresh air from the outdoors, the intake must be carried out from an adjecent room with contant fresh air ventilation. This fresh air connection must be designed in a way that is is impossible to shut off (e.g. when closing doors or windows)

Connection To The Flue

Montage Possibilities

- Situation 1: The boiler is connected to a standard chimney (stone-walled or metal), which has a fundament and a whole cross section of the fundament plate to the upper end point.
- Situation 2: The boiler is connected to a stainless steel flue which is mounted to the facade.

Situation 1:

- The chimney uses ceramic or metal pipes of circular cross-section of 130 mm diameter. The flue pipe must be insulated.
- If the chimney already exists and is of square cross-section, then the minimum dimension of the intersection is 130x130 mm.
- It is not allowed to use one chimney for connecting multiple boilers.
- It is not allowed to use the air vents like a chimney.
- The top of the chimney must be protected with a chimney cap due for the impact of rain and winds.
  Distance of chimney to cap is 200 mm.
- The chimney should come out above the roof according to the recommendations in the image on page 17.

  If other objects are near the chimney, take this into account and increase the height of chimney.
- The chimney must have a connection to extract condensation and an inspection door. The door should always be sealed well during the operation.

Situation 1 Chimney Connection Varan 1.14

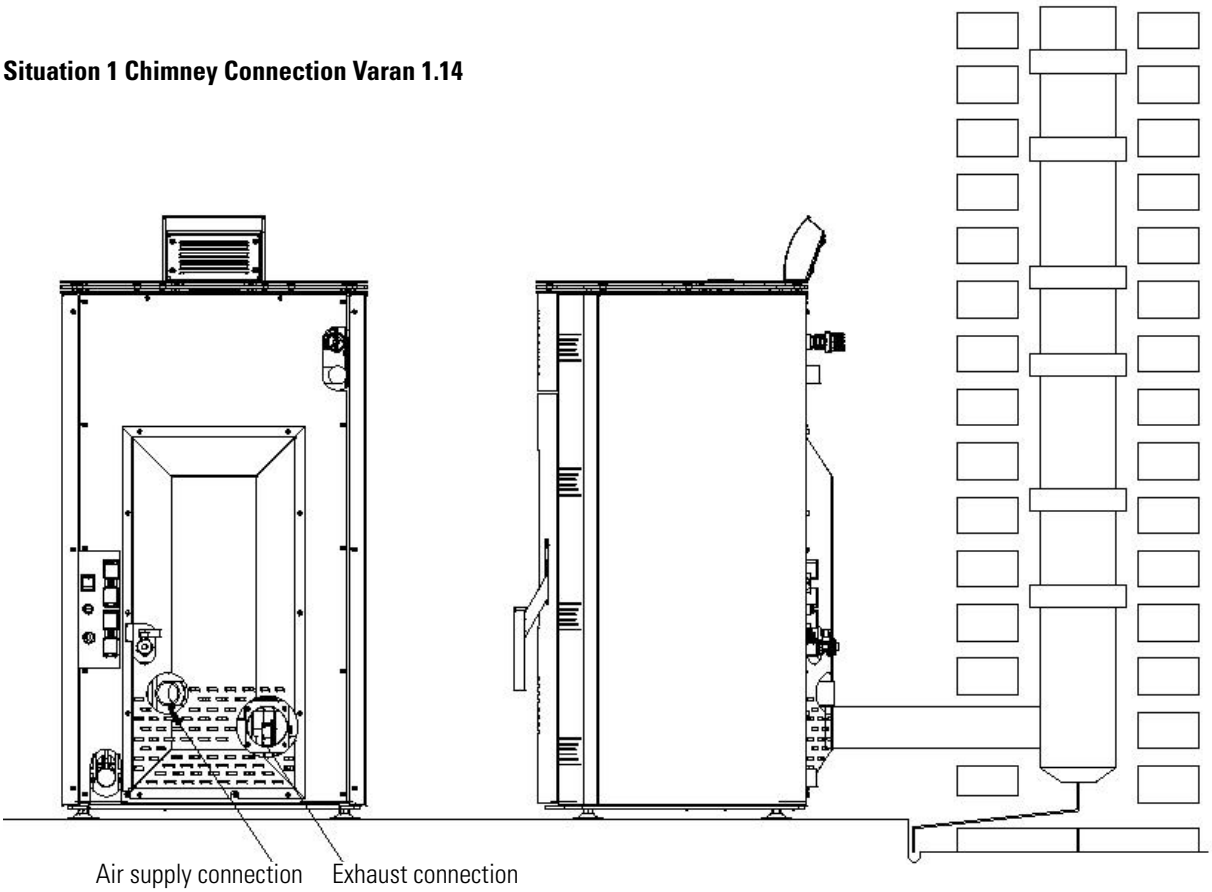

Situation 1
Chimney connection Varan 1.20

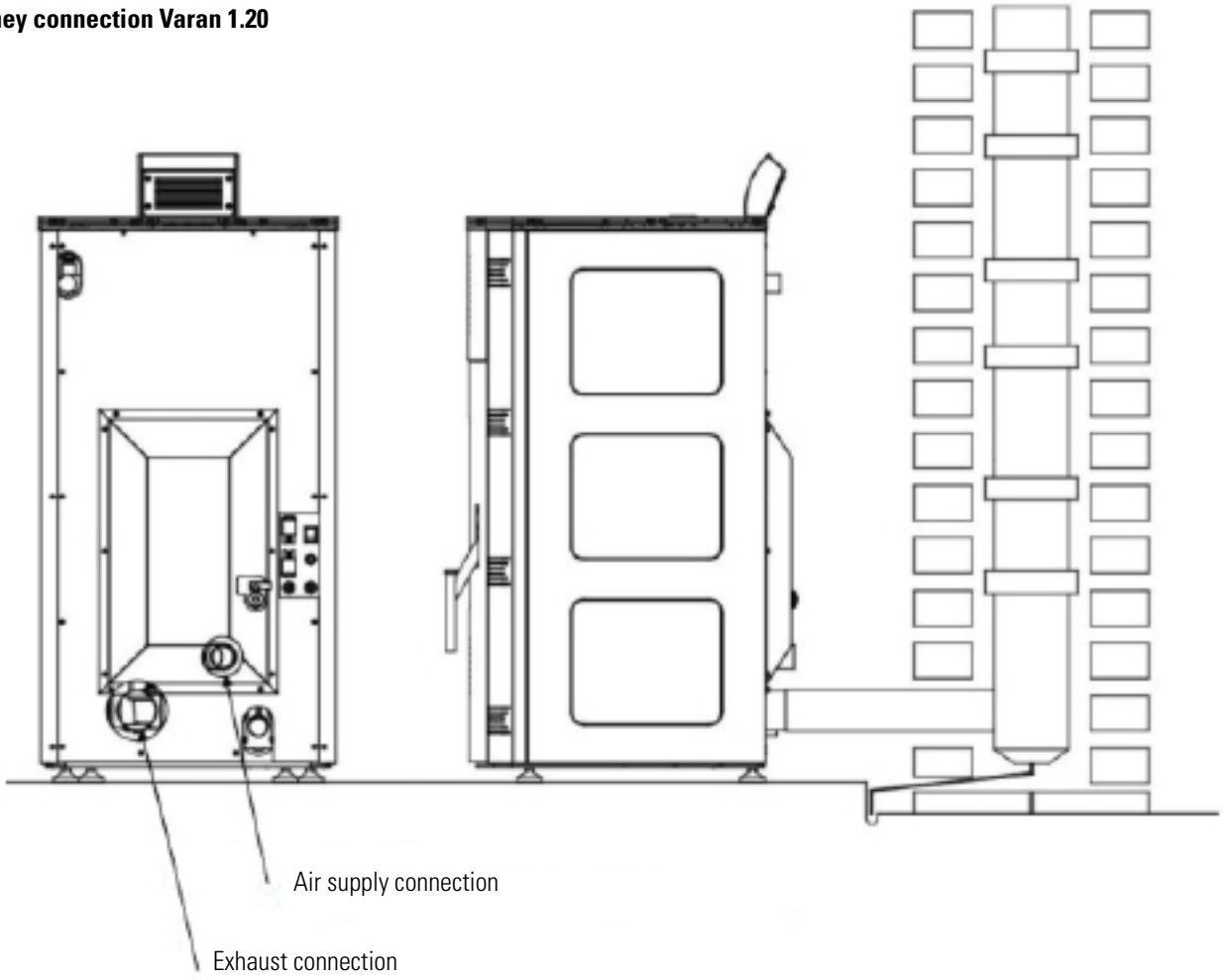

Situation 2:

- In this situation flue pipe must go at least 1.5 meters vertically upwards in the very room where the boiler is placed. Penetrate through the wall and connect the pipe onto the chimney.
- The flue pipe must have a T-piece for condensation at the outlet of the boiler and the possibility of dismantling for cleaning.

WARNING: Failure to follow the rules during the execution of flue and chimney can lead to malfunction of the boiler and danger to objects and to human health. The most notable danger is from the toxic gases (carbon monoxide) which are the products combustion process.

Important: We recommend to perform a chimney evaluation prior to installation.

1	Condensate collector
2	T-piece
3	Flue pipe
4	Knee 90° female-male fittings
5	Rosetta female-female fittings
6	Rosetta male-female fittings
7	Knie 90° male-male fittings
8	Wall brackets
9	Cover

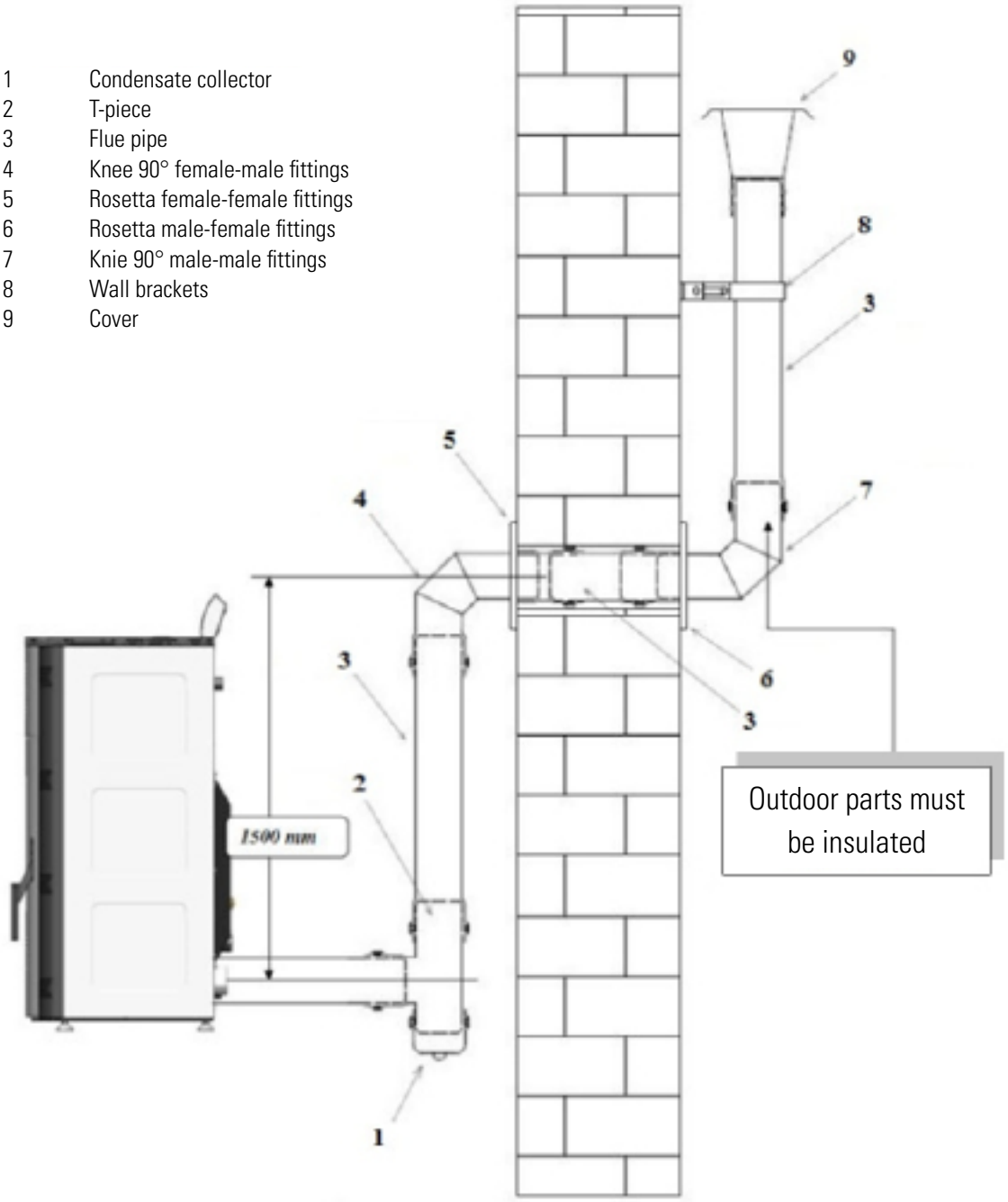

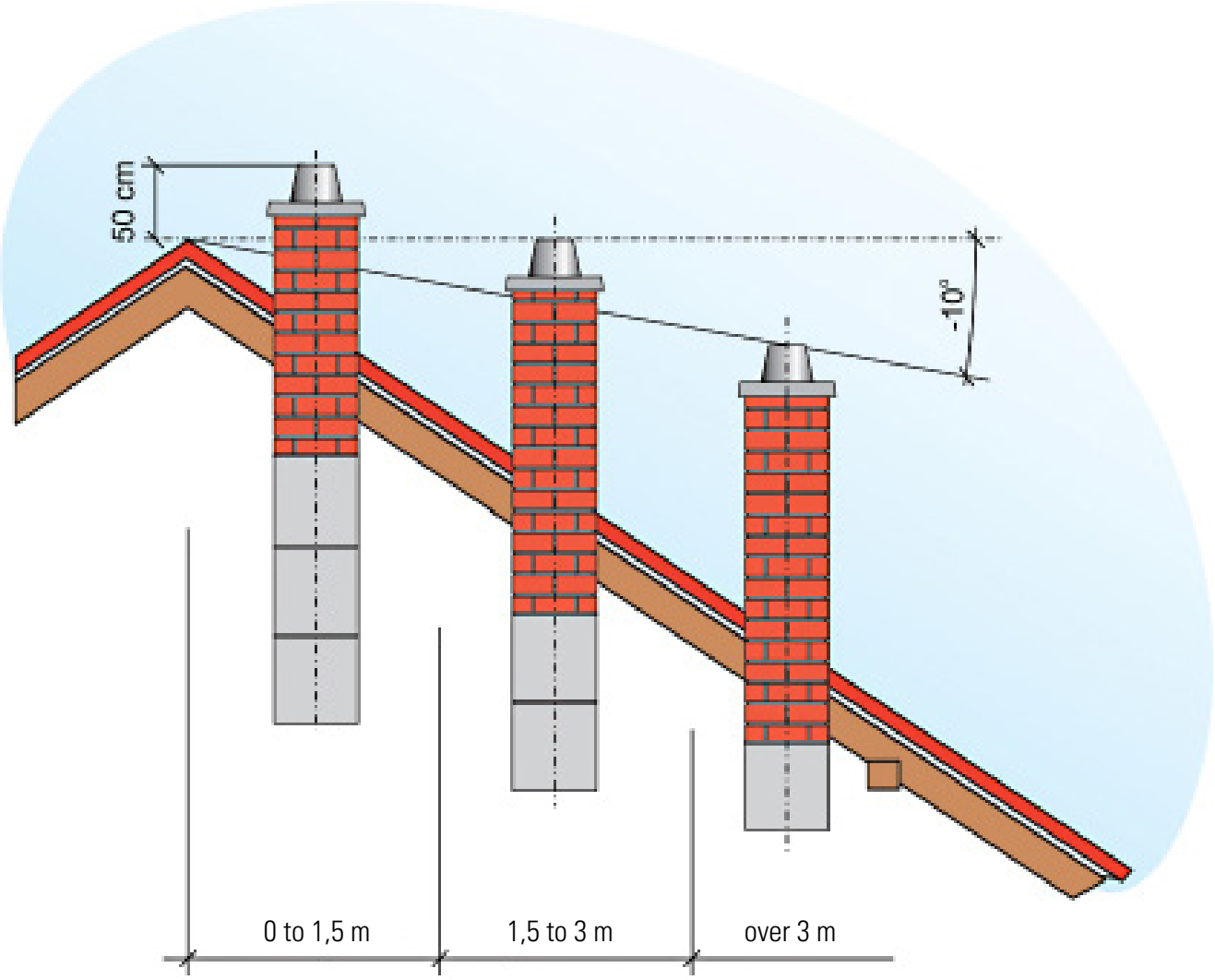
50 cm
-10°
0 to 1,5 m
1,5 to 3 m
over 3 m

6 Controller

The operating parameters the user has access to are visible on the screen. Additional parameters which influence boiler operation are reserved for qualified personnel ans must not be changed without reasons.

Controller panel with buttons and screen

Button	Functions	Description
P2 (ON/OFF)	Activating/Deactivating, reset alarm	Hold button (about 3 sec.) until a sound is audible.
P4 (^) P6 (v)	Sub menu selection, parameter selection change of parameter	Move through the menu. Change the values of parameters (increase/decrease).
P1 (ESC)	Leave, cancel	Leave current menu.
P3 (SET)	Confirm	Confirm/Access the current selection. Save changes.
P5 (#)	Time programme	Activating/Deactivating of the individual time programmes.

6.1 Controller Display

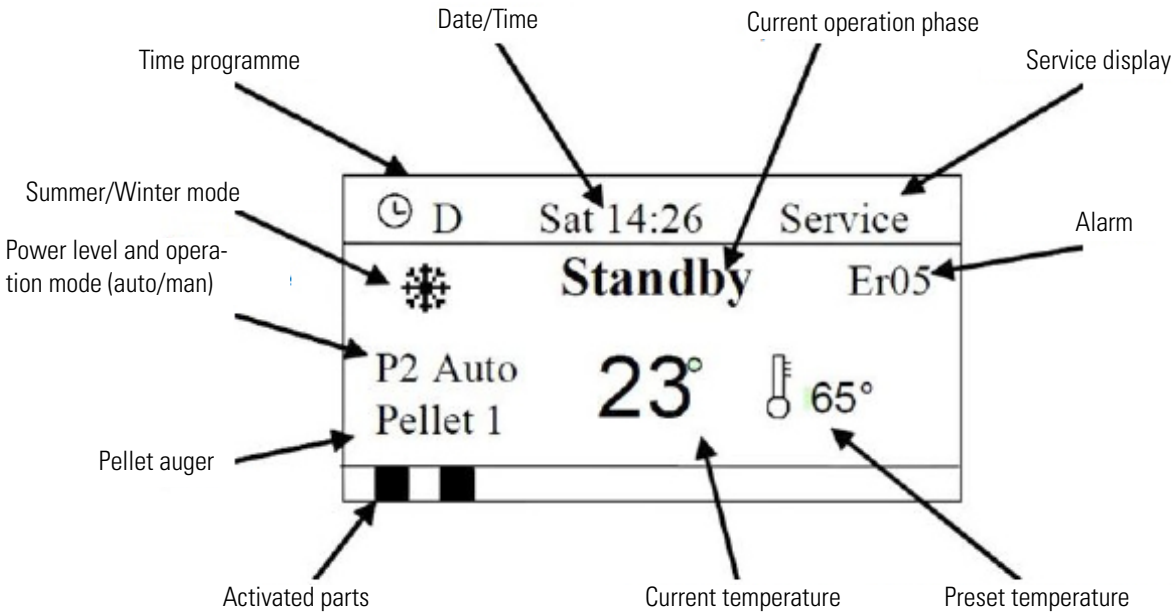

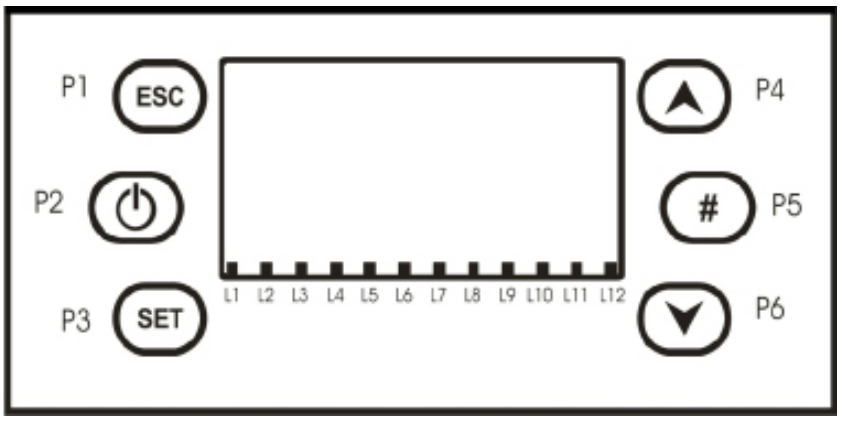

Scheme of the controller panel with all possible activated parts, dots L1–L12

Function	Description	Part
Electrical igniter	Dot visible: The igniter is active	L1
Pellet auger	Dot visible: The auger motor is active. The auger transports pellets into the combustion chamber.	L2
Circulator pump	Dot visible: The circulator pump is running.	L3
Three way switch valve	Dot visible: The three way switch valve (mixing valve) is active (only with domestic hot water module)	L4
Output V2	Not used.	L5
Fanr	Not used.	L6
Exit Aux2	Not used.	L7
Not used.	Not used.	L8
Not used.	Not used.	L9
Filling level	Not used.	L10
Room thermostat	Dot visible: Preset room temperature reached (contact open)	L11
Flow meter	Not used.	L12

Exhaust Temp	103	[°C]
Boiler Temp	55	[°C]
Buffer Temp	55	[°C]
Room Temp	35	(optional room temperatur sensor) [°C]
Pressure	1548	(water) [mbar]
Air Flow	680	[cm/s]
Auger	2.5	[s]
Product Code 395 – 0000		
FSYSD01000101.0.0		
FSYSF01000131.0.0		

Hold button P6 to see this display of current operating values.

6.2 Aufrufen des Menüs

Hold button P3 (SET) to open the menu. Use the arrow keys to select a menu item and confirm the choice with P3 (SET).

Menu item	Description
Combustion Power	Modification of the combustion programmes: AUTO, P1, P2 oder P3
Heating Power	Not used.
Boiler Thermostat	Set the desired boiler temperature.
Buffer Thermostat	Set the desired buffer or domestic hot water tank temperature. Not visible if P26 = 2, 3 or 4.
Room Thermostat	Set the desired room temperature (if a room sensor is present). Only visible if A19 = 1.
Chrono Modality	Select programme: Day, week, weekend, deactivated
Chrono Program	Adjust 3 switching cycles per day.
Time and Date	Set time and date.
Remote Control	Not used.
Calibration	Set auger run time and fan RPM
Load	Select this menu item to transport a starting load of pellets into the combustion chamber (after pellet tank has been emtied completely. After selection, the auger will run continously until a manual stop.
Summer-Winter	Select between winter or summer mode. Summer mode only provides domestic hot water.
Language	Select the language shown on the controller menu.
Keyboard Menu	Set contrast and min. backlighting.
System Menu	Allows settings reserved for qualified personnel.

6.3 Menu Use

- To activate the menu, press P3 (SET).
- The display will show a list of menu items. Use the buttons P4 (^) and P6 (v) and select – for example – ‚Combustion Power'.
- Confirm the selection with P3 (SET). It is now possible to change the setting..
- The now visible screen (see scheme on the right side) allows to change the setting using the buttons P4 (^) and P6 (v); switching between Auto, 1, 2, 3.
- Confirm and safe your selection with P3 (SET).
- To return to the main screen, press P1 (ESC).
- If the controller did not successfully apply the new setting, the display will read ‚Transmission not successful'.
  In this case, repeat the previous steps.

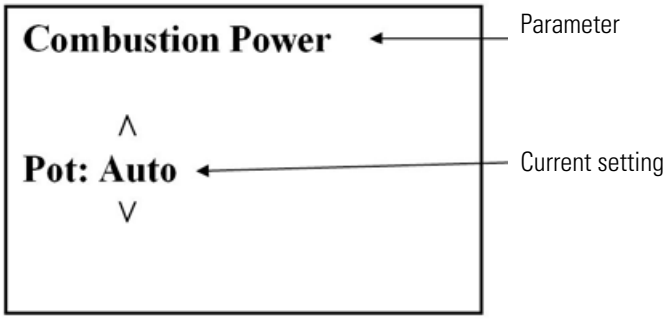

6.4 Change Combustion Power

Parameter	Description
3	Operation with power level 3
2	Operation with power level 2
1	Operation with power level 1
Auto	Operation starts with ‚level 3' and modulated after reaching the control temperature

6.6 Boiler Temperature

Allows to set the temperature between a maximum and a minimum value (parameters Th26 and Th27).

6.7 Buffer Temperature

This sub menu is only visible if a tank probe is connected and parameter P26 = 2,3,4.

6.8 Room Thermostat

Only visible if A19 = 1.

6.9 Chrono

(only use this option AFTER SETTING THE CORRECT TIME AND DATE!)

Coose between the options ‚Modality' and ‚Program'.

The ‚Modality' option is used to select the time programmes:

- „Daily": seperate programming of every weekday (monday, tuesday, wednesday, ... sunday);
- „Weekly": from monday to sunday,
- or „Week-end": from monday to friday and saturtay to sunday seperately,

Completely disable the time programmes with the item ‚Chrono (Disable)'. The item ‚Program' allows to set the switching cycles.

6.9.1 ‚Modality' sub menu

- Choose between ‚Modality' and ‚Program' and confirm the selection with P3 (SET).
- ‚Modality' lets you choos between: ‚Daily', ‚Weekly', ‚Weekend' and ‚Disable'.
- Use P4 (^) and P6 (v) to select the desired menu item and confirm the selection with P3 (SET).

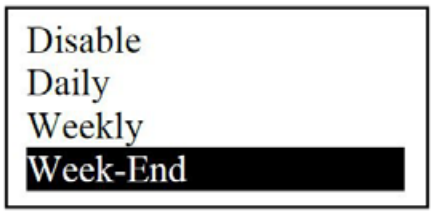

6.9.2 ‚Program' sub menu

To programme the ON/OFF heating cycles, choose the item ‚Program' and confirm the selection with P3 (SET).

- Use P4 (^) and P6 (v) to select the time value. Confirm the selection with P3 (SET) and the cursor moves to the next value. Use P1 (ESC) to return to the previous value if necessary.

The three programmes are saved seperately. For example – making changes in the ‚Daily' programme will not affect any other programming.

Important: To start operation with the programmed heating cycles, activate them using P5 (#). An active programme is marked with a ‚V'.

To deactivate an active programme, select it with the cursor (P4 (^) and P6 (v)) and press P5 (#) again.

Programming Over Midnight

For example, if a heating cycle is supposed to last from 6 pm/18:00 to 5 am/05:00, apply the following steps:

- Set the desired time on which the boiler should start heating operation (e.g. ‚ON' to 18:00). Now, for the same day, set the operation at 23:59 to ‚OFF'.
- Now open the programming for teh following day and set the operation at 00:00 to ‚ON'. On the same day set the time at which the boiler should cease operation.

Examples for possible programming in the ‚Program' sub menu

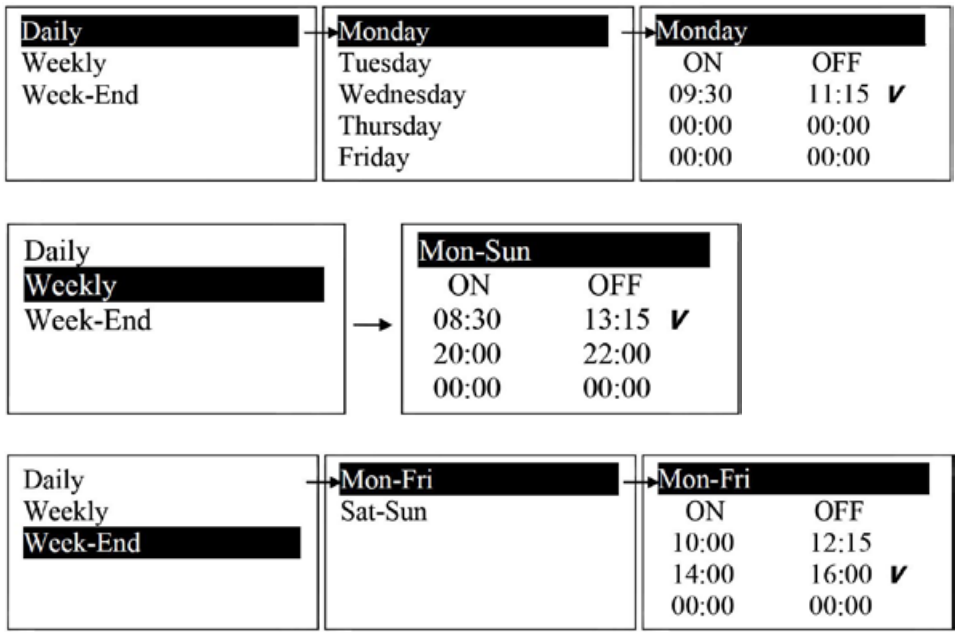

6.10 Time And Date

Choose the current time resp. the date with P4 (^) and P6 (v) and confirm yourcelection with P3 (SET).

Use P1 (ESC) to leave this setting.

6.11 Remote Control

Activate or deactive the connection with the remote control.

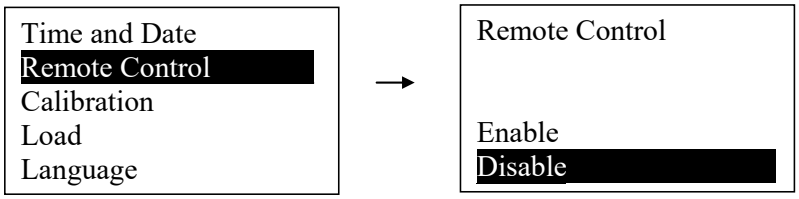

6.12 Calivration

Set the running time of the auger and the RPM of the fan. Coose from 10 calibration levels (the setting ex factory is ‚0'). Increasing or decreasing the value by ‚1' relates to an increase or decrease of 1%. This relative percentage can be adjusted (‚Calibration Step' in the system menu). The calibration effect is only active in operating mode and in pellet modulation.

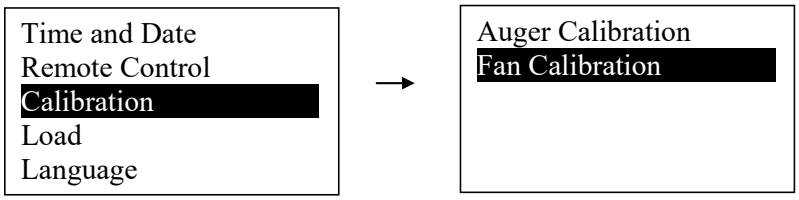

6.13 Load

This item allows the manual activation of the pellet auger. To activate the auger, select ‚ON' usingt P4 (^) resp. P6 (v) and confirm your selection with P3 (SET). To stop it, select ‚OFF' and confirm.

600 seconds after manual activation, the auger will automatically stop.

The boiler must not be in operating mode during load phase!

Time and Date
Remote Control
Calibration
Load
Language

→

Load

ON
OFF

6.14 Summer-Winter

In Winter mode, the boiler will produce heating water as well as domestic hot water (if the optional DHW module is attached). In Sommer mode, it will only produce domestic hot water (if the optional DHW module is attached). If the Winter mode is active, the display will show ❄. In Summer mode, the symbol ☀ is visible.

6.15 Language

Set the desired language of the display menu. Use P4 (^) resp. P6 (v) to select a language and confirm the selection with P3 (SET).

Time and Date
Remote Control
Calibration
Load
Language

→

Español
Française
Deutsch
English
Italiano

6.16 Keyboard Menu

Set the desired display contrast and the minimum display backlight. Use P4 (^) resp. P6 (v) to select a language and confirm the selection with P3 (SET).

Keyboard Menu
System Menu

→

Set Contrast
Set Minimum Light

Set Contrast
Set Minimum Light

→

Set Contrast

+
15
-

Set Contrast
Set Minimum Light

→

Set Minimum Light

+
5
-

6.17 System Menu

This menu allows settings reserved for qualified personnel. Because of this, the menu is keyword protected.
Ex factory, the keyword is **2111**.

To enter the keyword, confirm the selection ‚System Menu' with P3 (SET). Now it is possible to use P4 (^) and P6 (v) to increase or decrease the displayed digit. Confirm the desired digit with P3 (SET). After that, the cursor moves to the next position until all 4 digits are filled in. After the fourt digit is confirmed with P3 (SET) and the keyword is correct, the system menu will open.

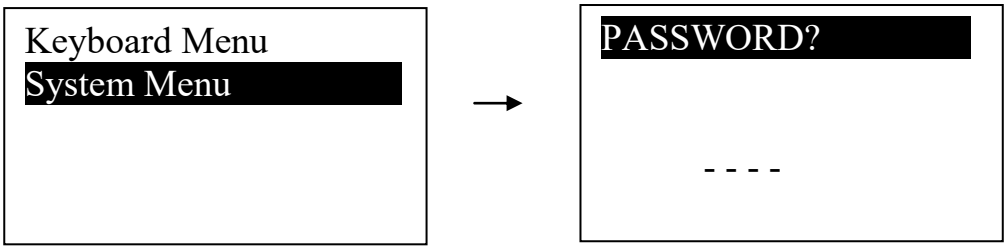

Important: Changes in the system menu can cause malfuntions or damages to the boiler and the system!

6.18 operation Parameters

Pellet Auger

Parameter	Recommended	Description
C01	0.5	Ignition
C02	0.8 – 1.0	Stabilisation
C03	0.8	Power level 1
C04	1.6	Power level 2
C05	1.8 – 2.0	Power level 3

Boiler Fan (RPM)

Parameter	Recommended	Description
U01	1250 – 1400	Ignition
U02	1600	Stabilisation
U03	1550	Power level 1
U04	1600	Power level 2
U05	1650 – 1700	Power level 3
P23	1700	Burn out

Time Programme

Parameter	Recommended	Description	Additional
T02	40	Igniter preheat time	
T03	40 – 50	Auger r un time prior to ignition (for pellet starting load)	There have to be enough pellets in front of the igniter hole!
T04	450	Timespan between start and normal operation	
T06	250	Stabilisation time	Durin this time span, the boiler temperature has to rise 7°C.

Thermostat Menu

Parameter	Recommended	Description
Th01	55 – 65	The boiler switches off if the flue gas temperature sinks below the set value.
Th02	45 – 50	The ignition switches of when the flue gas temperature reaches the set point.
TH06	46 – 51	A the set flue gas temperature, the boiler switches from ignition phase to stabilisation phase.
Th19	50	The circulator pump starts running at the set temperature.
Ih19	2	Pump hysteresis
Th28	55 – 65	The boiler switches to standby mode if the flue gas temperature sinks below the set point.

Funktion Menu

Parameter	Parameter	Description
A01	0	The boiler switches to burnout at this temperature (room thermostat).
	1	The boiler starts modulation at this temperature (room thermostat).
	2	The boiler switches to standby at this temperature (room thermostat).
	3	The pump is blocked at this temperature (room thermostat). Forced switch on, wehen the set value in Th21 is exceeded.
A06	0	In modulation phase, der boiler runs with ‚P1'
	1	In modulation phase, der boiler runs with individually programmable parameters U11 and C11

Differencial Temperature Menu

Parameter	Ex Factory	Description
D01	7	Difference for stabilising 54°C (restart) – 60°C (preset temperature) – 66°C (standby): results in hysteresis of +/- 6°C
D08	6	Difference for modulation 55°C (modulation start) – 60°C (preset temperature) – 66°C (standby):

Furter Important Parameters

Parameter	Ex Factory	Description
A24	0	Vacuum actuator

7 Operating Phases

7.1 Start

7.1.1 Filling Tank With Pellets

Open the lid of the pellet tank on the top rear of the boiler and fill it with pellets. Only fill it to a level where the lid can still be closed tightly.

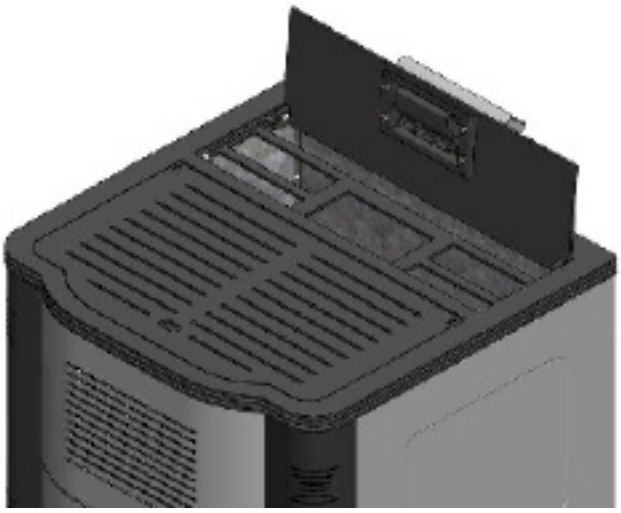

The pellet tank lid is open

7.1.2 Switch-on

Press the main switch on the boiler backside to switch on the boiler.
Make sure it is conected to the power supply.

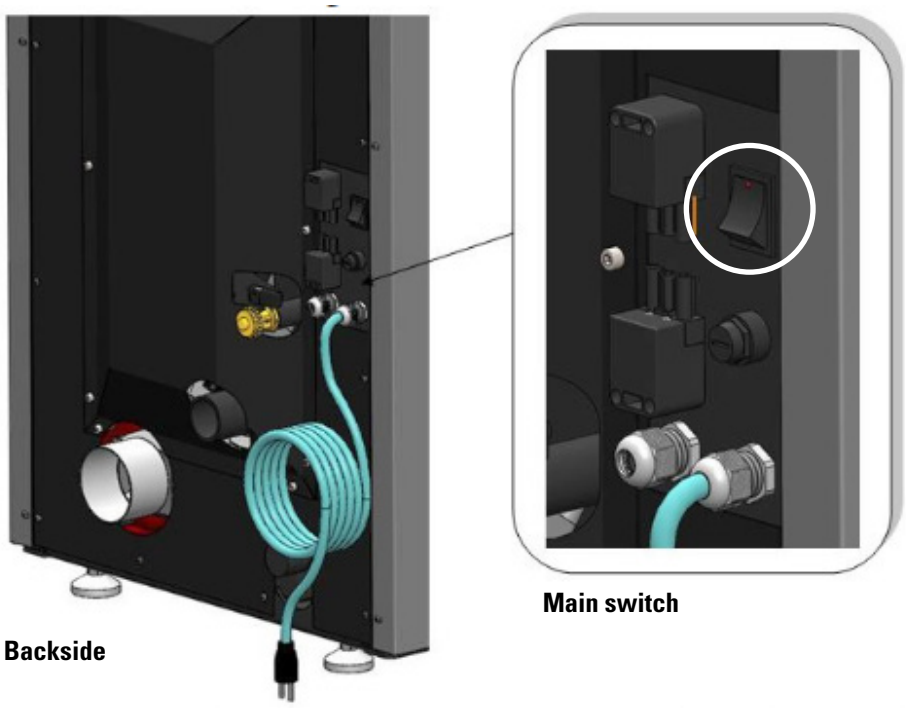

7.1.3 Starting Pellet Load

Activate the pellet dosing system for loading fuel into the combustion plate. This procedure can only be activated if the controller display shows ‚OFF' on the main screen.

- Press P3 (SET);
- The display will read a list. Use the buttons P4 (^) and P6 (v) to select ‚Load'.
- Confirm the selection with P3 (SET).
- Use P4 (^) resp. P6 (v) to select ‚ON' and confirm with P3 (SET).
- After pressing the button, the pellet auger starts running. Let it run until the first pellets fall into the combustion plate (visually inspect through the inner combustion chamber door.)
- To stop this procedure, select ‚OFF' and confirm the selection.
- Press 1 (ESC) to leave the sub menu.

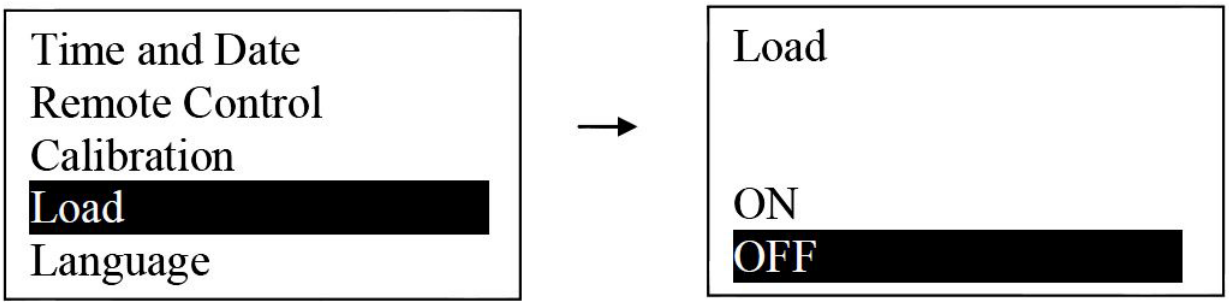

7.1.4 Starting Combustion

Hold P2 (ON/OFF) for 2 to 3 seconds until a conformation sound is audible. The display will now read ‚Ignition'. The boiler is now in operation.

When using standard pellets and if the air-flue-installation has been carried out correctly, the combustion process starts after 5 to 10 minutes.

When starting up a new ***Varan*** boiler, there may be an increased amount of smoke and combustion odour. This occurs because of coatings which protect the boiler against corrosion. After several hours of operation, the coating is burned out and stops emitting odours.

7.2 Switching Off

To switch off the boiler, hold P2 (ON/OFF) for 2 to 3 seconds until a conformation sound is audible. The boiler is now switched off.

8 Maintenance

8.1 Special Instructions

When cleaning the combustion chamber with a vacuum cleaner, the ash has to be cooled down completely. Otherwise there is a risk of fire.

When taking the burner plate out of the combustion chamber for cleaning, there is a risk of burn injuries if handled improperly. Shortly after deactivating the boiler, the combustion chmaber and ashes are still hot. Wait a proper amount of time for the boiler parts have cooled down so they may be touched safely. There is also a risk of burn injury when cleaning the heat exchanger tubes, because they will heat up to 200°C in operation.

During all cleaning work, there is a risk of suffocation (from carbon monoxide) if the boiler is still in operation and the doors are opened. Do not leave the boiler doors and lids open longer than necessary.

The amount of ash in the combustion chamber is related to the pellet quality. High quality, dry pellets produce less ask andless dust inside the pellet tank.

To prolong the lifetime of the igniter, regularily clean the air deduction and de igniter itself.

At the end of the heating season, the boiler have to be cleaned thoroughly to prolong its lifetime and keep top efficiency. Close all boiler doors and openings to minimise moisture build-up.

8.2 Intervals Of Cleaning And Mainenance

The regular cleaning and maintenance works are very important for a problem-free operation and guarantee a long boiler lifetime. The timespan between the periodical maintenance depends on pellet quality and power level of the boiler. On the combustion chamber walls and the heat exchanger tubes, soot and tar will form over time. Because of this, these parts have to be cleaned mechanically.

Prior to starting the cleaning work, switch off the boiler on the controller panel and on the main switch.

8.3 Daily Cleaning

During normal boiler runtime, ash is piling up inside the combustion chamber. To ensure a problem-free operation, the combustion chamber should be cleaned out from ash every day. At standard combustion parameters, the boiler will produce 1 kg of ash from 100 kg of pellets.

8.4 Every 3 To 4 Days

See images on the following page. Two times a week, thoroughly clean out the burner plate. Scrape any coating off the combustion chamber walls using a proper cleaning tool. A combustion chamber that is cree from soot coatings has the advantage of a better heat transmission and therefore better efficiency. Approximately, a coating thickness of 1 mm will reduce boiler efficiency by 5%.

8.5 Every 2 Weeks

Open the cleaning cover on the front top side of the boiler. Take out the turbulator spirals and remove deposits from the sorals and the heat exchanger tubes. The residues will fall down into the combustion chamber where they can be cleaned out along with the ashes. Use the revision openings on the flue pipe to clean out gross contaminations.

8.6 Cleaning And Maintenance Trough Qualified Personnel

Adhere to locar prescriptions and legal guidelines when it comes to periodical, professional cleaning and maintenance of the boiler and the flue system. A yearly cleaning carried out by our customer service is recommended.

Removable Parts When Cleaning

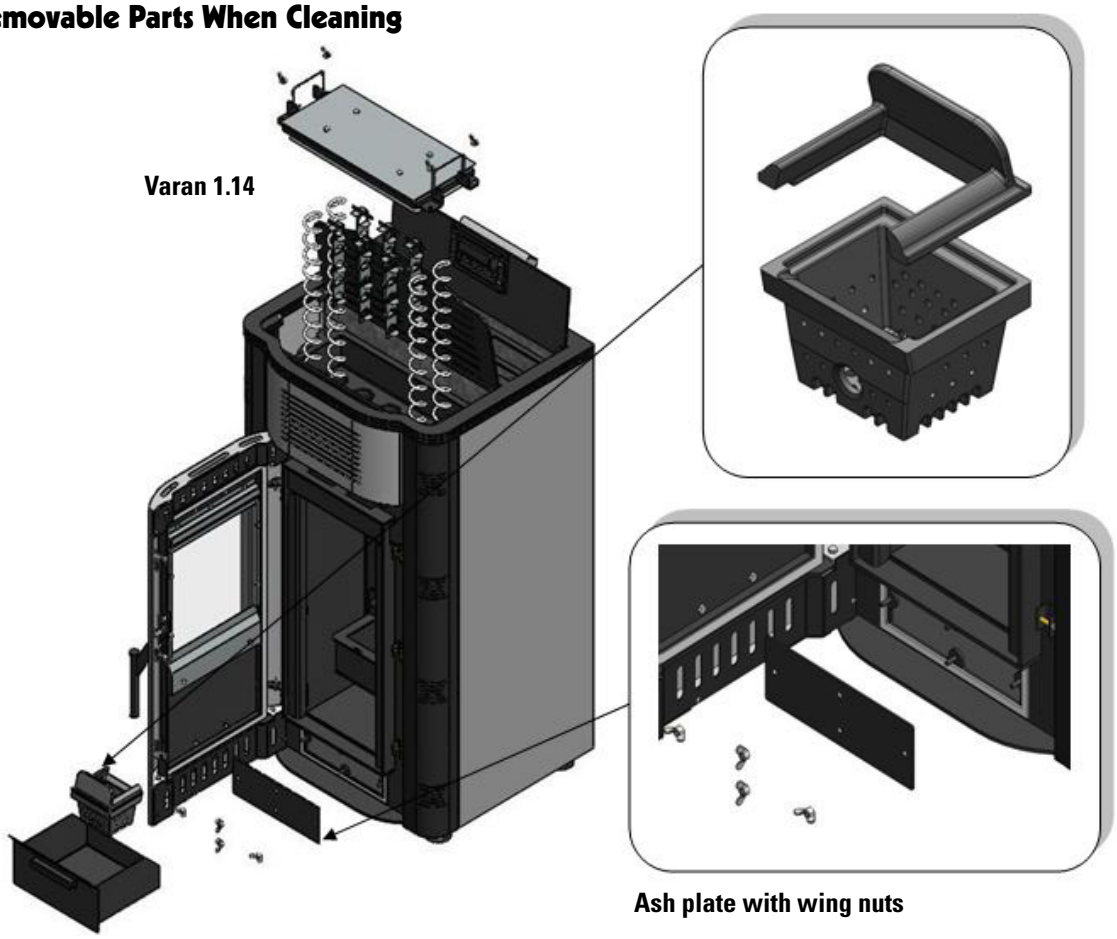

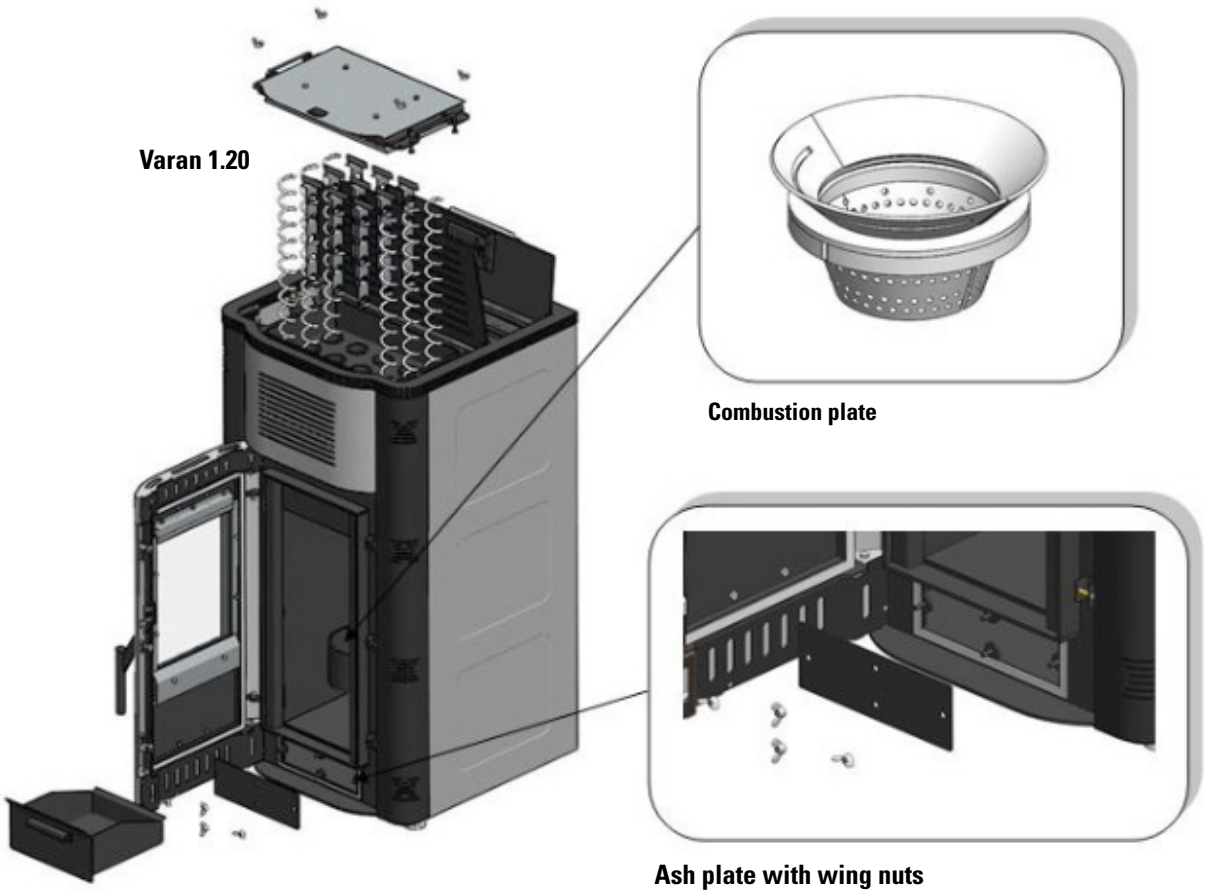

9 Possible Malfunctions

The boiler controller may display the following messages resulting from a malfuntion.

Er01	Error – High voltage (even when boiler is not in operation)
Er02	Error – High voltage (only when fan is in operation)
Er03	Error – Low flue gas temperature; boiler ceases operation
Er04	Error – High boiler temperature; boiler ceases operation
Er05	Error – High flue gas temperature; boiler ceases operation
Er07	Error – Signal error between encoder and controller
Er08	Error – Encoder encouters problems with counter
Er09	Error – Low water pressure
Er10	Error – High water pressure
Er11	Error – Wrong time-setting
Er12	Error – Ignition failed
Er15	Error – Low power supply voltage
Er17	Error – Error in vacuum actuator
Er18	Error – Low pellet level (not used)
Er39	Error – Vacuum actuator defective
Er41	Error – Minumum negative pressure could not be reached
Er42	Error – Negative pressure to high

All possible malfuntions in the operation of this device can be divided into two major groups.

Gruppe I: Error during the initial start of the boiler or the first start after a short deactivation period.

Gruppe II: The boiler switches off during run mode. After reaching set temperatures and a forced pause, the boiler will not start again without manual reset.

9.1 Group I

Adhere to the installation guidelines in the ‚Montage' part – especially the flue system (diameter, number of bends, sealing, ...), as well as the chimney (diameter, height, sealing of revision openings, pullution etc.).

The most common error message of this group is „E12". In case of insufficient flame formation after ignition and if the flue gas temperature failes to rise, the igniter will be displayed as active, but the boielr will switch to extingushing phase. If this happens, check the following:

- **Bad pellet quality or wet pellets.**
  Solution: only use, dry, high quality pellets.
  Combustion air temperature is too low (below 0°C).
  Solution: set a longer ignition time t02 to 30 – 40 seconds.
- **Power supply voltage is low (much below 230 V); the igniter output is insufficient.**
  Solution: set a longer ignition time t02 to 30 – 40 seconds. If this measure is unsuccessful, install an AC adapter that provides 230 V.
- **Pellet starting load insufficient, no flame formation.**
  Solution: Have qualified personnel check for mechanical problems on the auger or the motor.
- **Flame formation is successful, but the boiler remains in stabilisation phase and does not enter run mode.**
  Solution: The boiler needs more fuel in the combustion chamber. Set a longer timespan in parameter t03 – increase it step by step for a few seconds each. Please also mind the following reference.
- **There is flame formation after the timespan set in t03, but the boiler does not switch to stabilisation phase t04. The flame is getting weaker and the flue gas temperature is sinking. The boiler switches to extinguishing phase.**
  Solution: Decrease the timespan set in parameter t04 (stabilisation phase) it step by step for a few seconds each. Please also mind the previous reference.

- **The boiler is connected to a room thermostat, but does not switch to ignition mode**
  Solution: Check the current room temperature and compare it to the related preset temperature on the boiler. Make sure that the heating cycle is currently in operation. Test the room thermostat for possible malfunction.

9.2 Group II

The most common error message of this group is Er03.

- **The boiler has already been in run mode but ceased operation. During a new heating demand (from boiler or room thermostat), it will not start operation again. the combustion chamber is filled with unburned pellets.**
  Solution: Check the values in the parameters A26, Th28 and Th06. They may have been altered.
  The parameter A26 must be set to ‚1'.
  The parameter Th06 must be between ‚60' to ‚65,
  and parameter Th28 must be at least 2°C lower than Th06.

  Adjust the parameters, clean the combustion chamber and restart the boiler.
- **The boiler has already been in run mode, but unburnt pellets are piling up in teh combustion chamber. The flames are getting smaller and are extinguished.**
  Solution: Increase exhaust the fan RMP in all phases using the calibration menu.
- **The boiler is operating, but is stops unexpectetly and starts modulationg. After that, a safety switch-off occurs. (Extingishing) (Error Er05).**
  Solution: The flue gas temperature is too high – possibly resulting from a polluted boiler, too much draught, high fan power, too many pellets in the combustion chamber, bad pellet quality, etc. This problem can be solved usually by adjusting one of the parameters for the transmission to modulation or the safety switch-off (resulting from high flue gas temperature): Parameters Th07, Th08.

10 First Start-Up

The first start-up of this boilermay only be carried out by a professional of the company STREBEL or an experienced installer. If the start-up is not carried out correctly, the boiler and the system can be damaged, destroyed or injury and material damage can occur.

10.1 Precautions for the fisr start-up

1.) Disconnect boiler from power supply.

2.) Check if the red main switch on the boiler side is activated.

3.) Check if the following parts are installed professionally and working.

- All mechanical parts of the boiler,
- burner and chamotte bricks,
- fan,
- circuit pump,
- safety valve.

4.) Check of all electrical connections:

- Correct installation of all electric components (gear motor, fan, controller, display),
- Protection of unused connections,
- ground,
- power supply.

11 Boiler Disposal

11.1 Removal

The boiler removal must be carried out by qualified technicians. Otherwise, injury or material damage can occur.

Procedure of the removal

1.) Stop boiler operation.

2.) Wait until the pellets in the burner room are burnt up and the boiler is cooled down.

3.) Disconnect the boiler from power supply.

4.) Disconnect the boiler from the rest of the heating installation with a turncock and drain the water from the boiler.

5.) Remove pellet silo.

6.) Remove boiler shell.

7.) Remove mineral wool insulation from the boiler body.

11.2 Disposal

The steel parts of the boiler are delivered to a recycling centre:

- Boiler body,
- boiler shell,
- pellet silo,
- screw,
- gear motor,
- burner.

The electrical parts as well as glas parts, mineral wool and plastic parts are seperately delivered to the recycling centre.

The boiler parts must not be disposed in the domestic waste bin.

Space For Notes

Space For Notes

Space For Notes

Strebelwerk GmbH

2700 Wiener Neustadt, Wiener Strase 118, AUSTRIA
Telefon +43 (0)2622 235 55-0
Fax +43 (0)2622 253 46
verkauf@strebel.at
www.strebel.at

NAK, 0217